BLUELINE

DRYWALL TOOLS LLC

SG-3

Straight Glazer - 3"

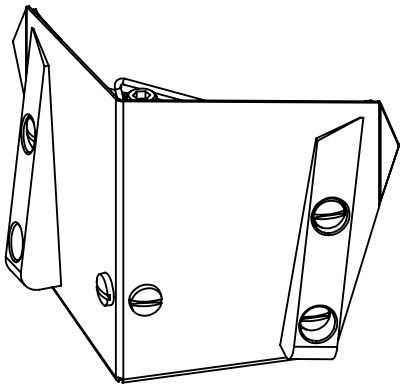

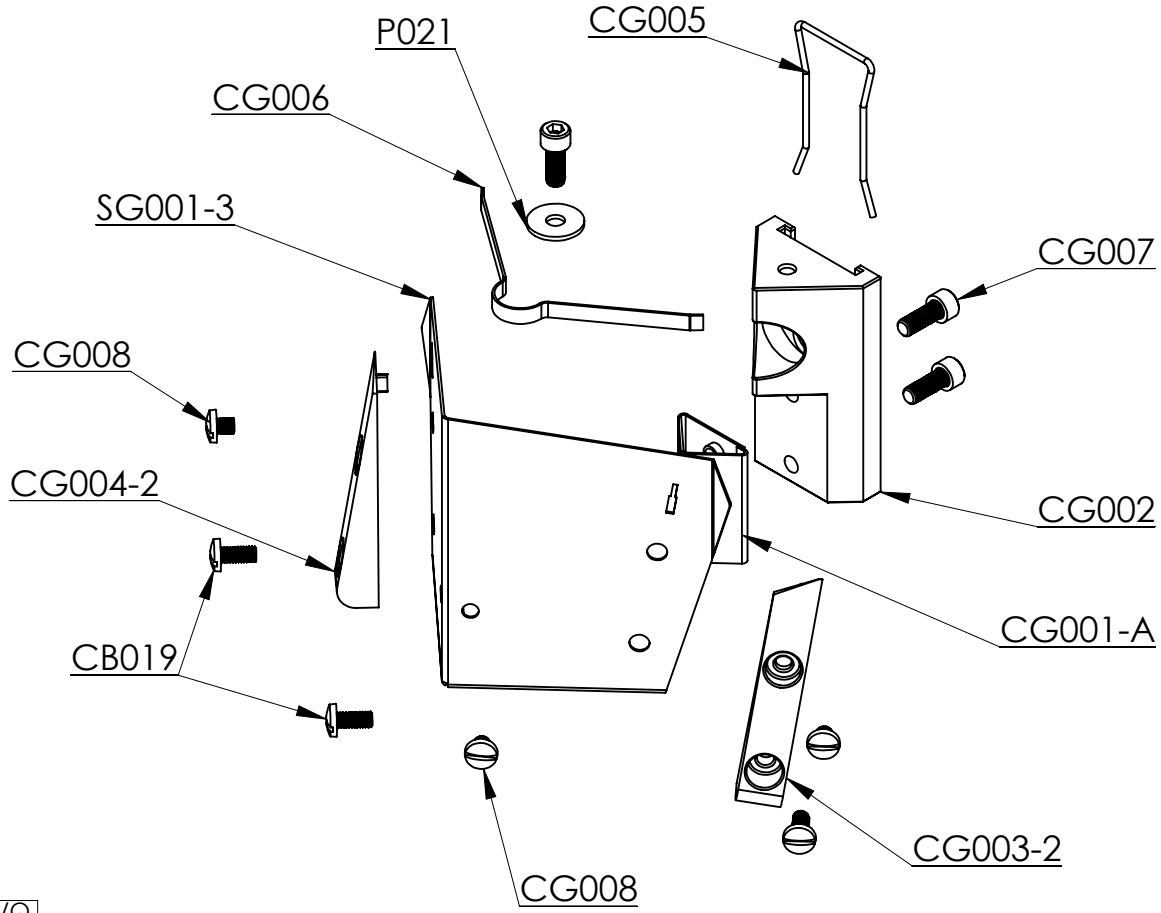

PART NUMBER	DESCRIPTION	Default/QTY.
SG001-3	Glazer Head	1
CG006	Flat Spring	1
P021	1/4" Flat Washer	1
CG005	Spring Retainer	1
CG007	10-32 X 1/2" Socket Cap	3
CG002	Ball Socket Block	1
CG001-A	Brace	1
CG003-2	Skid - Right	1
CG008	8-32 x 3/16" BH Screw	3
CG004-2	Skid - Left	1
CB019	8-32 X 5/8" BH	3

Designed for use with
CFH Handle

Effective Mar 10 2008